ORDER NO. CPD1103218CE

Service Manual

First Aid

Notebook Computer

Model No. CF-53AAGZXDM

TOUGHBOOK

This is the Service Manual for
the following areas.
M …for U.S.A. and Canada

⚠ WARNING

This service information is designed for experienced repair technicians only and is not designed for use by the general public.
It does not contain warnings or cautions to advise non-technical individuals of potential dangers in attempting to service a product.
Products powered by electricity should be serviced or repaired only by experienced professional technicians. Any attempt to service or repair the product or products dealt with in this service information by anyone else could result in serious injury or death.

Panasonic®

© Panasonic Corporation 2011.
Unauthorized copying and distribution is a violation of law.

WARNING

For U.K.

This apparatus must be earthed for your safety.

To ensure safe operation the three-pin plug must be inserted only into a standard three-pin power point which is effectively earthed through the normal household wiring.
Extension cords used with the equipment must be three-core and be correctly wired to provide connection to earth. Wrongly wired extension cords are a major cause of fatalities.
The fact that the equipment operates satisfactorily does not imply that the power point is earthed and that the installation is completely safe.
For your safety, if you have any doubt about the effective earthing of the power point, consult a qualified electrician.

FOR YOUR SAFETY PLEASE READ THE FOLLOWING TEXT CAREFULLY

This appliance is supplied with a moulded three pin mains plug for your safety and convenience.
A 3 amp fuse is fitted in this plug.
Should the fuse need to be replaced please ensure that the replacement fuse has a rating of 3 amps and that it is approved by ASTA or BSI to BS 1362.

Check for the ASTA mark or the BSI mark on the body of the fuse.
If the plug contains a removable fuse cover you must ensure that it is refitted when the fuse is replaced.
If you lose the fuse cover the plug must not be used until a replacement cover is obtained.
A replacement fuse cover can be purchased from your local Panasonic Dealer.
IF THE FITTED MOULDED PLUG IS UNSUITABLE FOR THE SOCKET OUTLET IN YOUR HOME THEN THE FUSE SHOULD BE REMOVED AND THE PLUG CUT OFF AND DISPOSED OF SAFELY.
THERE IS A DANGER OF SEVERE ELECTRICAL SHOCK IF THE CUT OFF PLUG IS INSERTED INTO ANY 13 AMP SOCKET.
If a new plug is to be fitted please observe the wiring code as shown below.
If in any doubt please consult a qualified electrician.

Warning: THIS APPLIANCE MUST BE EARTHED.

Important

The wires in this mains lead are coloured in accordance with the following code:

Green-and-yellow:	Earth
Blue:	Neutral
Brown:	Live

As the colours of the wires in the mains lead of this apparatus may not correspond with the coloured markings identifying the terminals in your plug, proceed as follows:
The wire which is coloured GREEN-and-YELLOW must be connected to the terminal in the plug which is marked by the letter E or by the safety earth symbol coloured GREEN or GREEN-and-YELLOW.

The wire which is coloured Blue must be connected to the terminal which is marked with the letter N or coloured BLACK.
The wire which is coloured Brown must be connected to the terminal which is marked with the letter L or coloured RED.

The mains plug on this equipment must be used to disconnect the mains power.
Please ensure that a socket outlet is available near the equipment and shall be easily accessible.

■ How to replace the fuse

Open the fuse compartment with a screw-driver and replace the fuse.

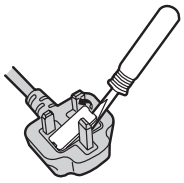

Warnings

- This equipment is not designed for connection to an IT power system.
  (An IT system is a system having no direct connections between live parts and Earth; the exposed-conducive-parts of the electrical installation are earthed.
  An IT system is not permitted where the computer is directly connected to public supply systems in the U.K.)
- Disconnect the mains plug from the supply socket when the computer is not in use.

This equipment is produced to BS800/1983.

LASER SAFETY INFORMATION

Class 1 LASER Product

PRODUCT COMPLIES WITH DHHD RULES 21 CFR CHAPTER 1,SUBCHAPTER J. 130KS

This equipment is classified as a class 1 level LASER product and there is no hazardous LASER radiation.

Caution

(1) Use of controls or adjustments or performance of procedures other than those specified herein may result in hazardous exposure.

(2) The drive is designed to be incorporated into computer-based system or unit which has an enclosing cover. It should never be used as a stand alone drive.

Danger

The serviceman should not remove the cover of drive unit and should not serve, because the drive unit is a non-serviceable part..

- Unplug the AC power cord to the equipment before opening the cover of the drive.
- When the power switch is on, do not place your eyes close to the front panel cover to look into the interior of the unit.

LASER Specification

Class 1 Level LASER Product

Wave Length: DVD: 656 – 665 nm, CD: 777 – 790nm

SAFETY PRECAUTIONS

1. Before servicing, unplug the power cord to prevent an electric shock.
2. When replacing parts, use only manufacture's recommended components for safety.
3. Check the condition of the power cord. Replace if wear or damage is evident.
4. After servicing, be sure to restore the lead dress, insulation barriers, insulation papers, shields, etc.

Important Safety Instructions

When using your telephone equipment, basic safety precautions should always be followed to reduce the risk of fire, electric shock and injury to persons, including the following:

1. Do not use this product near water, for example, near a bath tub, wash bowl, kitchen sink or laundry tub, in a wet basement or near a swimming pool.
2. Avoid using a telephone (other than a cordless type) during an electrical storm. There may be a remote risk of electric shock from lightning.
3. Do not use the telephone to report a gas leak in the vicinity of the leak. vicinity of the leak.
4. Use only the power cord and batteries indicated in this manual. Do not dispose of batteries in a fire. They may explode. Check with local codes for possible special disposal instructions.

SAVE THESE INSTRUCTIONS

LITHIUM BATTERY

This computer contains a lithium battery to enable the date, time, and other data to be stored. The battery should only be exchanged by authorized service personel.

Warning! A risk of explosion from incorrect installation or misapplication may possibly occur.

LITHIUM BATTERY ⚠

- **CAUTION**

  Danger of explosion if battery is incorrectly replaced.
  Replace only with the same or equivalent type recommended by the manufacturer.
  Discard used batteries according to the manufacturer's instructions.

LITHIUMBATTERIES ⚠

Vorsicht!

Explosionsgefahr bei unsachgemäßem Austausch der Batterie. Ersatz nur durch denselben order einen vom Hersteller empfohlenen ähnlichen Typ. Entsorgung gebrauchter Batterien nach Angaben des Herstellers.

PILE AU LITHIUM ⚠

ATTENTION: IL Y A DANGER D'EXPLOSION S' IL Y A REMPLACEMENT INCORRECT DE LA BATTERIE. REMPLACER UNIQUEMENT AVEC UNE BATTERIE DU MÈME TYPE OU D'UN TYPE RECOMMANDÉ PAR LE CONSTRUCTEUR. METTRE AU RÉBUT LES BATTERIES USAGÉES CONFORMÉMENT AUX INSTRUCTIONS DU FABRICANT.

Precautions (Battery Pack)

Do Not Use With Any Other Product
The battery pack is rechargeable and was intended for the specified product. If it is used with a product other than the one for which it was designed, electrolyte leakage, generation of heat, ignition or rupture may result.

Do Not Charge the Battery Using Methods Other Than Those Specified

If the battery is not charged using one of the specified methods, electrolyte leakage, generation of heat, ignition or rupture may result.

Do Not Throw the Battery Pack into a Fire or Expose It to Excessive Heat

Generation of heat, ignition or rupture may result.

Avoid Extreme Heat (Near the Fire, in Direct Sunlight, for Example)

Electrolyte leakage, generation of heat, ignition or rupture may result.

Do Not Insert Sharp Objects into the Battery Pack, Expose It to Bumps or Shocks, Disassemble, or Modify It

Electrolyte leakage, generation of heat, ignition or rupture may result.
- If this product is subjected to a strong impact, stop using it immediately.

Do Not Short the Positive (+) and Negative (-) Contacts

Generation of heat, ignition or rupture may result.
- Do not place the battery pack together with articles such as necklaces or hairpins when carrying or storing.

Do Not Use This Product With a Battery Pack Other Than the One Specified

Use only the specified battery pack (CF-VZSU71U) with your product. Use of battery packs other than those manufactured and supplied by Panasonic may present a safety hazard (generation of heat, ignition or rupture).

When battery pack has deteriorated, replace it with a new one

Continued use of a damaged battery pack may result in heat generation, ignition or battery rupture.

CAUTION:
Risk of Explosion if Battery is replaced by an Incorrect Type.
Dispose of Used Batteries According to the Instructions.
58-E-1

ATTENTION:
Il y a risque d'explosion si la batterie est remplacée par une batterie de type incorrect.
Mettre au rebut les batteries usagées conformément aux instructions.
58-F-1

Do not touch the terminals on the battery pack. The battery pack may no longer function properly if the contacts are dirty or damaged.
Do not expose the battery pack to water, or allow it to become wet.
If the battery pack will not be used for a long period of time (a month or more), charge or discharge (use) the battery pack until the remaining battery level becomes 30% to 40% and store it in a cool, dry place.
This computer prevents overcharging of the battery by recharging only when the remaining power is less than approx. 95% of capacity.
The battery pack is not charged when the computer is first purchased. Be sure to charge it before using it for the first time. When the AC adaptor is connected to the computer, charging begins automatically.
Should the battery leak and the fluid get into your eyes, do not rub your eyes. Immediately flush your eyes with clear water and see a doctor for medical treatment as soon as possible.

NOTE

The battery pack may become warm during recharging or normal use. This is completely normal.
Recharging will not commence if internal temperature of the battery pack is outside of the allowable temperature range (0°C to 50 °C) (➔ *Reference Manual* "Battery Power"). Once the allowable range requirement is satisfied, charging begins automatically. Note that the recharging time varies based on the usage conditions. (Recharging takes longer than usual when the temperature is 10 °C or below.)
If the temperature is low, the operating time is shortened. Only use the computer within the allowable temperature range.
This computer has a high temperature mode function that prevents the degradation of the battery in high temperature environments. (➔ *Reference Manual* "Battery Power") A level corresponding to a 100% charge for high temperature mode is approximately equivalent to an 80% charge level for normal temperature mode.
The battery pack is a consumable item. If the amount of time the computer can be run by using a particular battery pack becomes dramatically shorter and repeated recharging does not restore its performance, the battery pack should be replaced with a new one.
When transporting a spare battery inside a package, briefcase, etc., it is recommended that it be placed in a plastic bag so that its contacts are protected.
Always power off the computer when it is not in use. Leaving the computer on when the AC adaptor is not connected will exhaust the remaining battery capacity (➔ *Reference Manual* "LAN").

RECYCLE RBRC Li-ion 1.800.822.8837

A lithium ion battery that is recyclable powers the product you have purchased.
Please call 1-800-8-BATTERY for information on how to recycle this battery.

L'appareil que vous vous êtes procuré est alimenté par une batterie au lithium-ion.
Pour des renseignements sur le recyclage de la batterie, veuillez composer le 1-800-8-BATTERY.

48-M-1

Precautions (AC Adaptor)

FOR USE WITH MODEL NO. **CF-AA5713A**

POUR UTILISER AVEC MODÈLE **CF-AA5713A**

Use Only the Specified AC Adaptor With This Product
Using an AC adaptor other than the one supplied (attached to your product or supplied by Panasonic) may result in a fire.

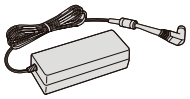

Model No: CF-AA5713A

Disassembling Flow Chart

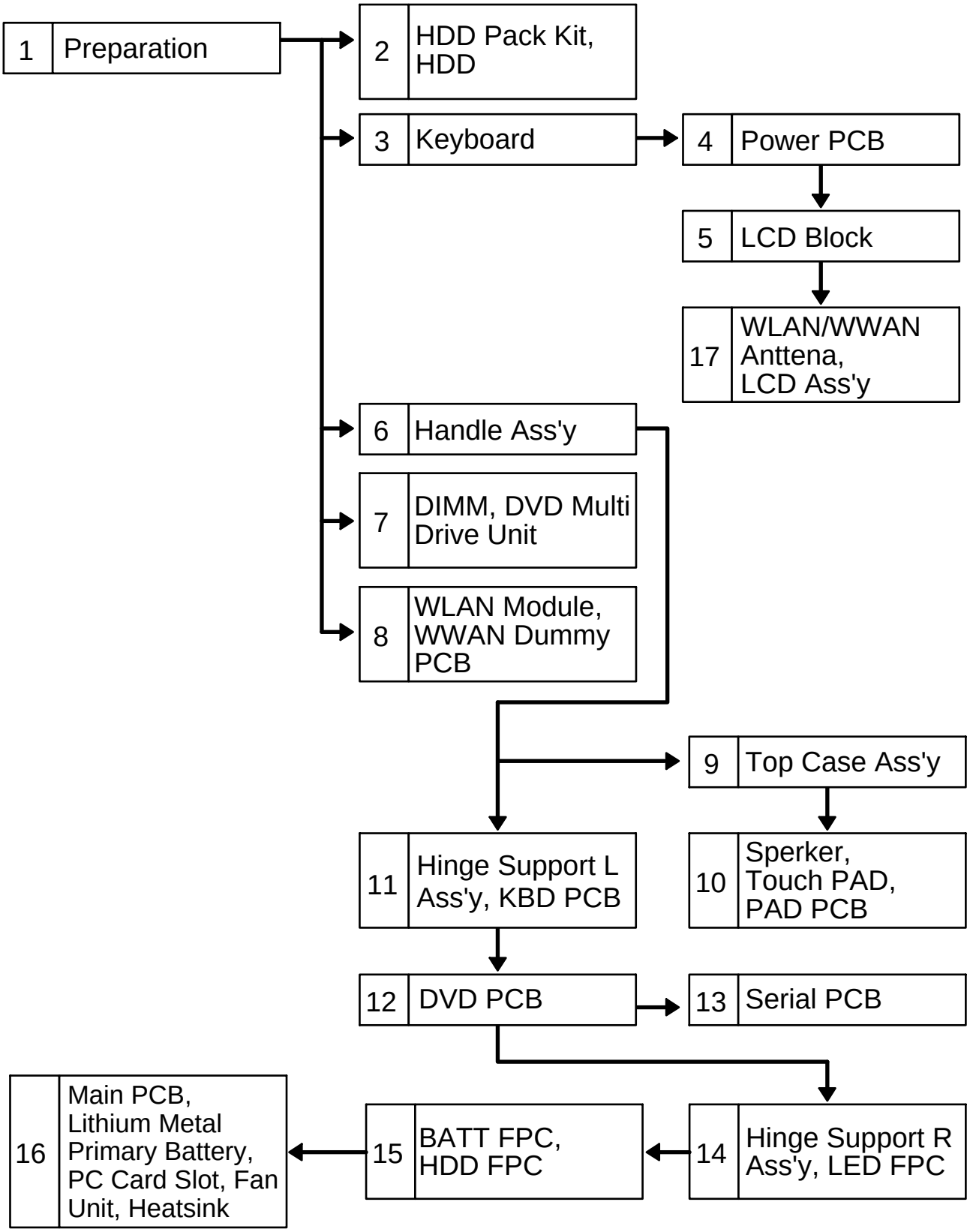

Exploded View

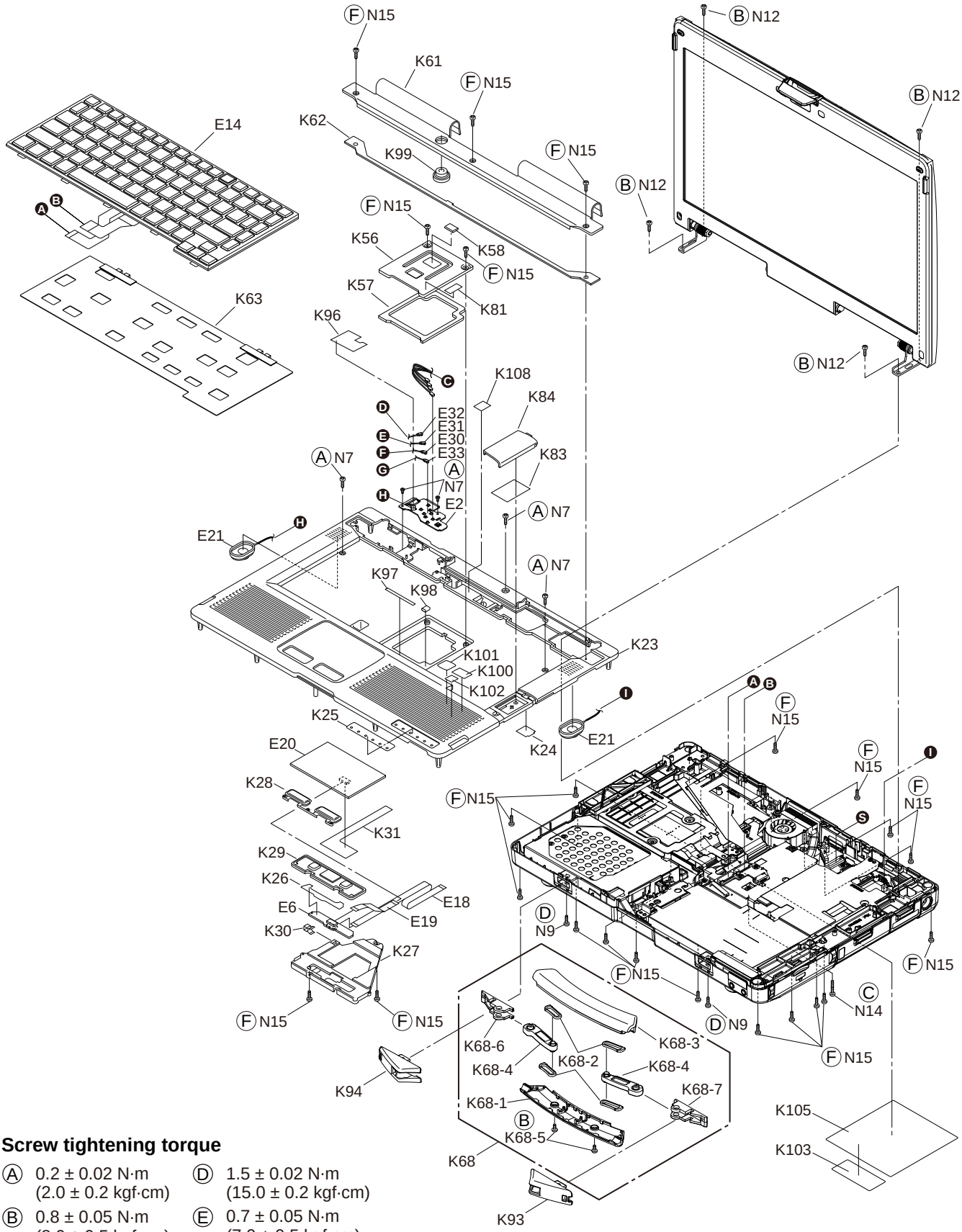

Screw tightening torque

Ⓐ 0.2 ± 0.02 N·m (2.0 ± 0.2 kgf·cm)	Ⓓ 1.5 ± 0.02 N·m (15.0 ± 0.2 kgf·cm)
Ⓑ 0.8 ± 0.05 N·m (8.0 ± 0.5 kgf·cm)	Ⓔ 0.7 ± 0.05 N·m (7.0 ± 0.5 kgf·cm)
Ⓒ 0.45 ± 0.02 N·m (4.5 ± 0.2 kgf·cm)	Ⓕ 0.25 ± 0.02 N·m (2.5 ± 0.2 kgf·cm)

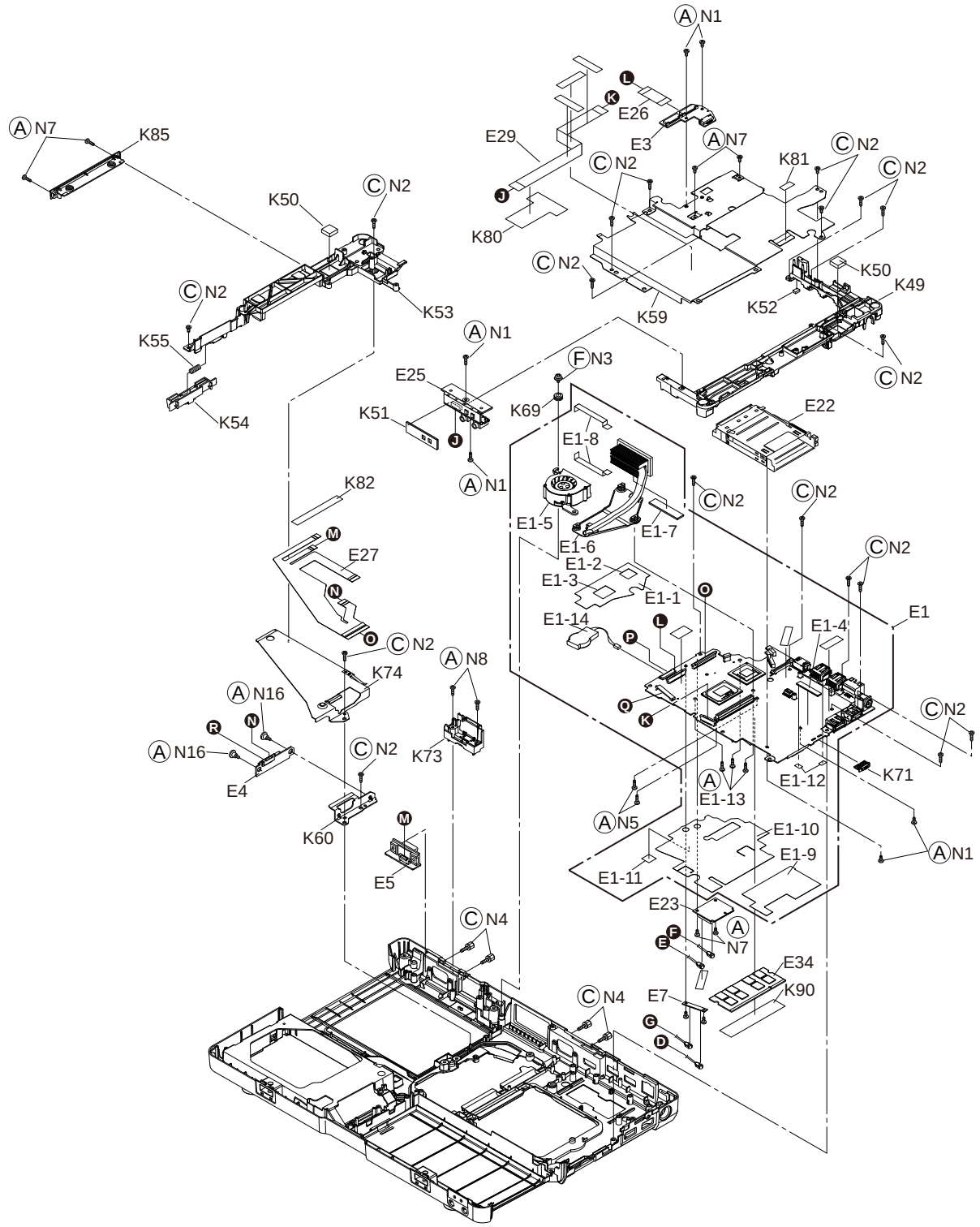

Screw tightening torque

Ⓐ 0.2 ± 0.02 N·m (2.0 ± 0.2 kgf·cm)	Ⓓ 1.5 ± 0.02 N·m (15.0 ± 0.2 kgf·cm)
Ⓑ 0.8 ± 0.05 N·m (8.0 ± 0.5 kgf·cm)	Ⓔ 0.7 ± 0.05 N·m (7.0 ± 0.5 kgf·cm)
Ⓒ 0.45 ± 0.02 N·m (4.5 ± 0.2 kgf·cm)	Ⓕ 0.25 ± 0.02 N·m (2.5 ± 0.2 kgf·cm)

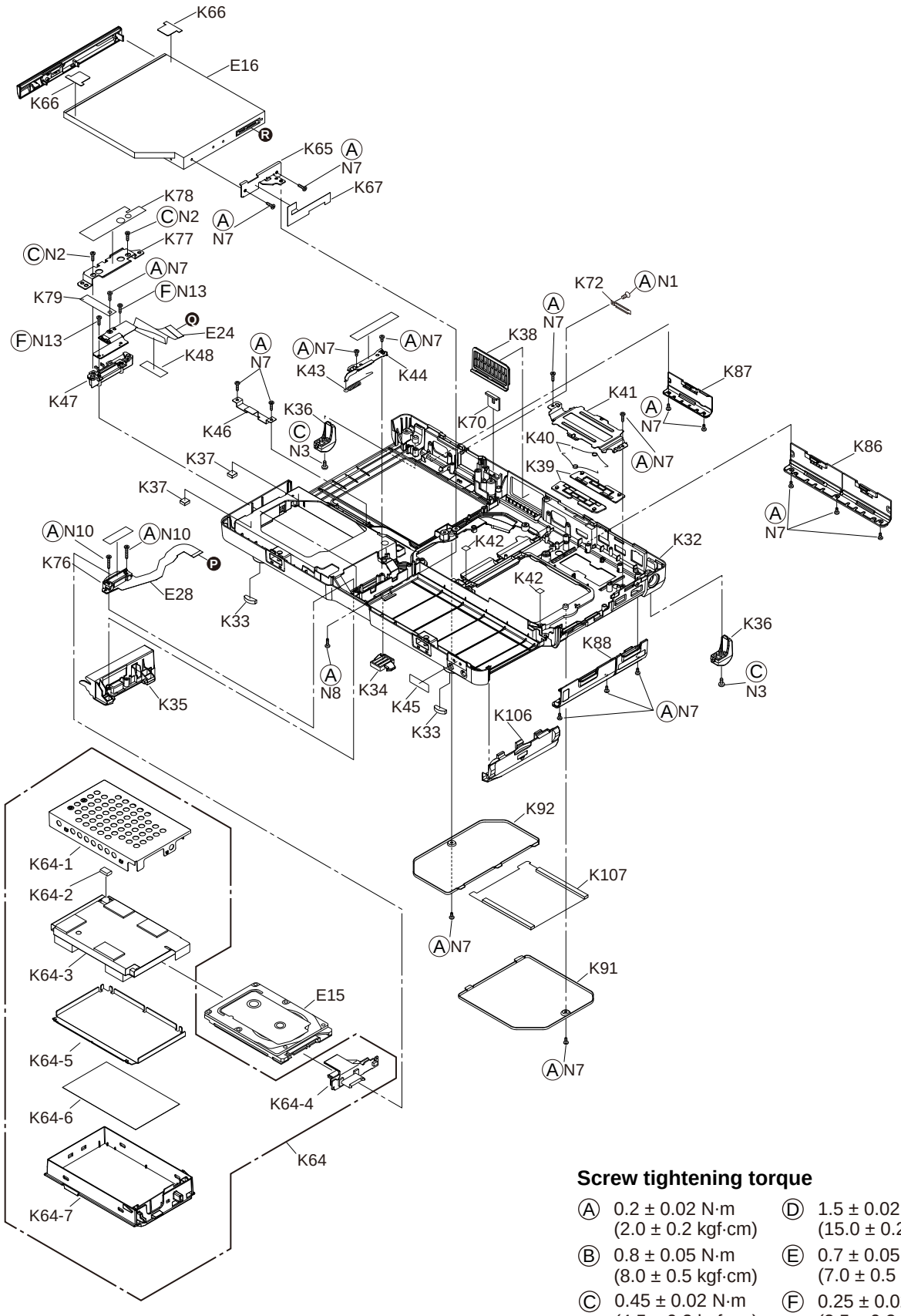

Screw tightening torque

Ⓐ 0.2 ± 0.02 N·m (2.0 ± 0.2 kgf·cm)	Ⓓ 1.5 ± 0.02 N·m (15.0 ± 0.2 kgf·cm)
Ⓑ 0.8 ± 0.05 N·m (8.0 ± 0.5 kgf·cm)	Ⓔ 0.7 ± 0.05 N·m (7.0 ± 0.5 kgf·cm)
Ⓒ 0.45 ± 0.02 N·m (4.5 ± 0.2 kgf·cm)	Ⓕ 0.25 ± 0.02 N·m (2.5 ± 0.2 kgf·cm)

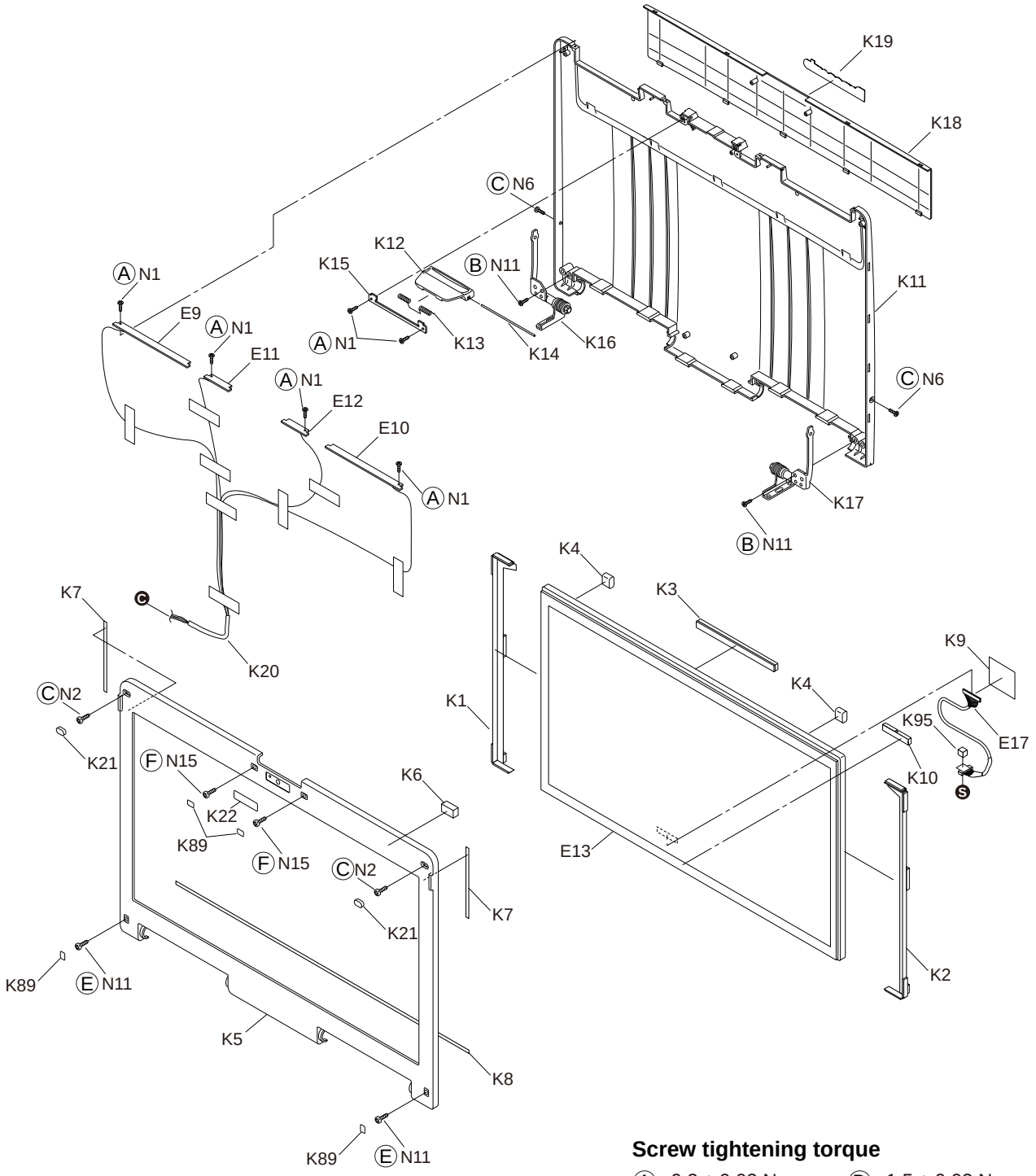

Screw tightening torque

Ⓐ	0.2 ± 0.02 N·m (2.0 ± 0.2 kgf·cm)	Ⓓ	1.5 ± 0.02 N·m (15.0 ± 0.2 kgf·cm)
Ⓑ	0.8 ± 0.05 N·m (8.0 ± 0.5 kgf·cm)	Ⓔ	0.7 ± 0.05 N·m (7.0 ± 0.5 kgf·cm)
Ⓒ	0.45 ± 0.02 N·m (4.5 ± 0.2 kgf·cm)	Ⓕ	0.25 ± 0.02 N·m (2.5 ± 0.2 kgf·cm)

Replacement Parts List

Note : Important Safety Notice
Components identified by ⚠ mark have special characteristics important for safety.
When replacing any of these components, use only manufacturer's specified parts.

CF-53AAGZXDM

REF. NO and AREA	PART NO.	DESCRIPTION		Q'TY
Main Block Unit				
E1	DFWV48C0997	PCB, MAIN STD TS(W COIN BATTERY)		1
E1-1	DFMX1487ZA	CPU INSU SHEET	NRP	1
E1-2	DFMY0533ZA	THERMAL RUBBER	NRP	1
E1-3	DFMY0554ZA	HEAT RADIATION RUBBER CPU	NRP	1
E1-4	DFHR3S94ZA	SPACER	NRP	1
E1-5	UDQFMMH01D	FAN UNIT		1
E1-6	DFMY5058ZA	HEATSINK		1
E1-7	DFUS0343ZA	FAN SHIELD FINGER	NRP	1
E1-8	DFHR3S83ZA	FAN CONNECT SHEET	NRP	2
E1-9	DFMX1488YA	DIMM INSU SHEET	NRP	1
E1-10	DFMX1489YA	MINI PCI INSU SHEET	NRP	1
E1-11	DFMC1008ZA	MAGNETIC SHEET	NRP	1
E1-12	DFHR3T92ZA	SPACER	NRP	2
E1-13	DRHM5104ZAT	SCREW		3
E1-14	CR-2032/S5ZN	LITHIUM METAL PRIMARY BATTERY	NRP	1
E2	DL32U1943AAA	PCB, POWER		1
E3	DL33U1943AAA	PCB, KBD		1
E4	DL34U1943AAA	PCB, DVD		1
E5	DL35U1943AAA	PCB, SERIAL		1
E6	DL36U1943AAA	PCB, PAD		1
E7	DL37U1943AAA	PCB, WWAN DUMMY		1
E9	DL31U1990AAA	WWAN MAIN ANTENNA(W CABLE)		1
E10	DL32U1990AAA	WWAN SUB ANTENNA(W CABLE)		1
E11	DL33U1990AAA	WIMAX/WLAN MAIN ANTENNA(W CABLE)		1
E12	DL34U1990AAA	WIMAX/WLAN SUB ANTENNA(W CABLE)		1
E13	DL5DD0201AAA	STD LCD FILM UNIT		1
E14	N2ABZY000152	KEYBOARD US	NRP	1
E15 ⚠	N3CAYYY00104	HDD, S-ATA 320GB		1
E16 ⚠	N3EZYYY00010	DVD MULTI DRIVE		1
E17	DFJS1290ZA	CABLE LCD		1
E18	DFJK9045ZA	FFC PAD		1
E19	DFJK10T113DB	FFC CLICK		1
E20	N2EAYYY00021	TOUCH PAD		1
E21	L0AA02B00003	SPEAKER		2
E22	K1NB94B00002	EX/PC CARD EJECTOR		1
E23 ⚠	N5HZC0000056	WIRELESS LAN MODULE		1
E24	DFWP0170ZA	FPC BATT		1
E25	DFWP0165ZA	FPC LED		1
E26	DFJK9047ZA	FFC KB		1
E27	DFUP1945ZA	FPC MP		1
E28	DFWP0169ZA	FPC HDD		1
E29	DFJK9048ZA	FFC LED AUDIO		1
E30	DFJS1280ZA	CABLE RELAY ANTENNA MAIN		1
E31	DFJS1281ZA	CABLE RELAY ANTENNA SUB		1
E32	DFJS1282ZA	CABLE RELAY ANTENNA WWAN MAIN		1
E33	DFJS1283ZA	CABLE RELAY ANTENNA WWAN SUB		1
E34	N5ZZ00000211	SO-DIMM 4GB DDR3-1333MHz		1
Accessories				
A1 ⚠	CF-AA5713AM1	AC ADAPTOR		1
A2 ⚠	K2CG3DR00004	AC CORD		1
A3 ⚠	CGR-B/9A7AE	LI-ION RECHARGEABLE BATTERY		1
A4 ⚠	DFQW5496ZAT	MANUAL(CF-53MK1 NA)		1
A5	DFQM8721MAT	RECOVERY DVD, WIN7 32BIT		1

Packing Material				
P1		DFPK1327ZAT	PACKING CASE	1
P2		DFPN0852YAT	CUSHION B	2
P3		DFPN0875ZAT	CUSHION T	2
P4		DFPP0136ZAT	PROTECTION BAG	1
P5		DFPH0085ZAT	KBD PROTECTION SHEET	1
Mechanical Parts				
K1		DFHG2376ZA	LCD CUSHION R ASS'Y NRP	1
K2		DFHG2375ZA	LCD CUSHION L ASS'Y NRP	1
K3		DFHG2377ZA	LCD CUSHION TOP NRP	1
K4		DFHE1237ZA	GASKET-62TS-10-5-10 NRP	2
K5	⚠	DFKF0322ZA-0	LCD FRONT	1
K6		DFHE0893ZA	LID MAGNET NRP	1
K7		DFHP7426YA	LCD TAPE NRP	2
K8		DFHP7434ZA	LCD TAPE L NRP	1
K9		DFHR3S82ZA	LCD CN SHEET NRP	1
K10		DFHG2378ZA	LCD CUSHION BOTTOM NRP	1
K11	⚠	DFKM0593YA-0	LCD REAR	1
K12	⚠	DFKE1076ZA-0	LCD LATCH	1
K13		DFUN0086ZA	LCD_LATCH_SPRING	1
K14		DFDF5026ZA	LCD LATCH SHAFT	1
K15		DFMD7C71ZA	LATCH HOLD PLATE	1
K16		DFBH1202ZA	HINGE L	1
K17		DFBH1203ZA	HINGE R	1
K18	⚠	DFKE1070ZA-0	ANTENNA COVER	1
K19		DFGB0191ZA-0	PANASONIC LABEL NRP	1
K20		DFHR6634ZA	TUBE	1
K21		DFHG2009ZA-0	LCD RUBBER NRP	2
K22		DFGE0220ZA-0	HOLE BLIND SHEET	1
K23	⚠	DFKM0594ZA-0	TOP CASE	1
K24		DFHR3S77ZA	FP HOOK WP SHEET NRP	1
K25		DFGE0218ZA-0	FRONT LED SHEET NRP	1
K26		DFHP7430ZA	PAD PWB FIX TAPE NRP	1
K27		DFHR6579ZA	PAD HOLDER	1
K28		DFBC0337YA-0	CLICK BUTTON	1
K29		DFHG2338ZA	CLICK WP RUBBER	1
K30		DFMC0797ZA	EARTH PLATE	1
K31		DFHR3S79ZA	SCREW SHEET NRP	1
K32	⚠	DFKF0321ZB-0	BOTTOM CASE	1
K33		DFHG2336ZA	FOOT RUBBER NRP	2
K34		DFBD0196ZA-0	BATTERY LATCH KNOB	1
K35		DFHR6572ZA-0	HDD CN HOLD CASE	1
K36		DFHG2337ZA	LEG	2
K37		DFHE1238ZA	GASKET HDD NRP	2
K38	⚠	DFKE1075ZA-0	FAN COVER	1
K39	⚠	DFKE1096ZA-0	PORT SHUTTER	2
K40		DFUN0097ZA	PORT RE COVER SPRING	2
K41		DFMD7C98ZA	PORT SHUTTER ANGLE	1
K42		DFHR3S80ZA	PORT HOOK BLIND SHEET NRP	2
K43		DFUD0043ZC	BATTERY SPRING	1
K44		DFMD7C76ZA	HDD CN SHAFT ANGLE	1
K45		DFGE0219ZA-0	POWER LED SHEET NRP	1
K46		DFMC0988ZA	POTRI EMI PLATE	1
K47		DFHR6578ZA	BATT CN HOLD	1
K48		DFHR3S93ZA	PROTECT SHEET NRP	1
K49		DFME0163YA	HINGE SUPPROT R	1
K50		DFHG2383ZA	SPEAKER CUSHION NRP	2
K51		DFMX1492ZA	AUDIO FPC INSU SHEET NRP	1
K52		DFHE1252ZA	GASKET 62TS-4-2-7 NRP	1
K53		DFME0162ZA	HINGE SUPPROT L	1
K54		DFBD0213ZA-0	HDD SIDE LATCH LEVER	1
K55		DFUQ0122ZA	HDD LOCK LEVER SPRING	1
K56		DFHM0477ZA	KBD LID PLATE	1

K57		DFHG2384ZA	KB FPC WP CUSHION NRP	1
K58		DFHE1239ZA	GASKET KB	1
K59		DFMC0986ZA	EARTH PLATE	1
K60		DFMD7C77ZA	DVD CARD PLATE	1
K61	⚠	DFKE1074ZA-0	TILT COVER	1
K62		DFHG2385ZA	TILT COVER WP CUSHION NRP	1
K63		DFHR3S36YA	KB SPACER NRP	1
K64		DFWV99A0173	HDD PACK KIT	1
K64-1		DFHM0478YA	HDD CASE UPPER	1
K64-2		DFHE1241ZA	GASKET HDD UNIT NRP	1
K64-3		DFHR3S35ZB	HDD DAMPER H7	1
K64-4		DFWP0167ZA	FPC HDDPACK	1
K64-5		DFMC0990ZA	HDD SHIELD PLATE	1
K64-6		DFHP7431ZA	HDD SHIELD PLATE TAPE NRP	1
K64-7	⚠	DFKF0323ZA-0	HDD COVER	1
K65		DFMD7C67ZA	ODD FIX ANGLE A NRP	1
K66		DFHG2451ZA	DVD CUSHION NRP	2
K67		DFHR3S85ZA	ODD SCREW SHEET	1
K68	⚠	DFKE8216YA-0	HANDLE ASS'Y	1
K68-1	⚠	DFKE1094YA-0	HANDLE GRIP STD TOP	1
K68-2		DFHR6577ZA	HANDLE RING	4
K68-3	⚠	DFKE1095YA-0	HANDLE GRIP STD BOTTOM	1
K68-4	⚠	DFKE1068YA-0	HANDLE JOINT	2
K68-5		DRSB3+8FKLT	SCREW	2
K68-6		DFHR6629ZA	HANDLE BASE RING R	1
K68-7		DFHR6580ZA	HANDLE BASE RING L	1
K69		DFHG2362ZA	RUBBER BUSH	1
K70		DFMD7C78ZA	KENSINGTONG PLATE	1
K71		DFBD0214ZA-0	WIRELESS SW KNOB	1
K72		DFMD7C75YA	SIMM COVER PLATE	1
K73		DFHR6581ZA-0	COVER WITHOUT OPTION	1
K74		DFHM0479ZA	PROTECT PLATE	1
K76		DFHR6622ZA	HDD CN HOLD	1
K77		DFMD7C69ZA	BATT FPC PLATE	1
K78		DFHR3S88ZA	SCREW SHEET	1
K79		DFMC0613ZAT	DOUDENFU-10X39 NRP	1
K80		DFMX1493YA	AUDIO FFC INSU SHEET NRP	1
K81		DFMC0729ZAT	SHIELD CLOTH NRP	2
K82		DFMX1491ZA	BT FPC INSU SHEET NRP	1
K83		DFHR3S76ZA	FP COVER WP SHEET NRP	1
K84	⚠	DFKE1072ZA-0	COVER FINGER DUMMY	1
K85		DFHR6615ZA-0	SMART LESS COVER	1
K86		DFHR6576ZA-0	COVER IO-R	1
K87		DFHR6574ZA-0	COVER IO-L	1
K88		DFHR6575ZB-0	COVER PC CARD	1
K89		DFGX0591ZA-0	SCREW BLIND SHEET	4
K90		DFHR3S41ZA	DIMM FIX TAPE NRP	1
K91	⚠	DFKF0324ZA-0	DIMM COVER	1
K92	⚠	DFKF0325ZA-0	CONFIG COVER	1
K93	⚠	DFKE1097ZA-0	HANDLE BASE R	1
K94	⚠	DFKE1069ZA-0	HANDLE BASE L	1
K95		DFHG2448ZA	LCD CN CUSHION NRP	1
K96		DFHR3S90ZA	SCREW SHEET NRP	1
K97		DFHP7425ZA	KB FPC WP TAPE	1
K98		DFHE1240ZA	GASKET EARTH PLATE NRP	1
K99		DFBC0338ZA-0	POWER SW BUTTON	1
K100		DFQT0117ZA	CORE I5 VPRO 2G LABEL	1
K101		DFQT0092ZA	WINDOWS 7 LOGO LABEL	1
K102		DFQT0045ZB	ENERGY STAR LABEL	1
K103		DFQT0050ZB	COA LAMINATE SHEET LARGE	1
K104		DFQT0058YA	SERIAL LAMINATE SHEET	1
K105		DFGT1441ZA	NAMEPLATES(US)	1
K106	⚠	DFKE1071ZA-0	BATTERY COVER	1

K107	DFHR3U12ZA	SUPPORT SHEET DIMM CN	1
K108	DFHR3U14ZA	SUPPORT SHEET	1
N1	DFHE5122YA	SCREW	13
N2	DRHM0093ZA	SCREW	22
N3	DRHM0130ZAT	SCREW	3
N4	DRHM0163ZAT	SCREW	4
N5	DRQT2+E8FKLT	SCREW	2
N6	DRQT26+E3NLT	SCREW	2
N7	DRSB2+3FKLT	SCREW	30
N8	DRSB2+5FKLT	SCREW	3
N9	DRSN4+6FKLT	SCREW	2
N10	DRTB2+14GJKT	SCREW	2
N11	DXQT3+F6FNLT	SCREW	4
N12	DXSN3+6FNLT	SCREW	4
N13	DXTB2+10GFNT	SCREW	2
N14	XTB26+10GJKT	SCREW	1
N15	DRHM0177ZAT	SCREW	25
N16	DRHM0178ZAT	SCREW	2

Replacement Parts List

Note: Important Safety Notice
Components identified by ⚠ mark have special characteristics important for safety.
When replacing any of these components use only manufacturer's specified parts.

CF-53AAGZXDM

REF. NO and AREA		PART NO.	DESCRIPTION	Q'TY
MAIN PCB				
C 1, 2, 3, 4, 5, 6, 7, 8, 9, 10, 11, 13, 14, 15, 16, 17, 18, 19, 20, 21, 36, 37, 38, 39, 40, 41, 42, 43, 45, 47, 48, 50, 52, 53, 55, 57, 58, 60, 62, 63, 65, 67, 68, 69, 70, 71, 73, 76, 77, 79, 80, 82, 84, 86, 89, 91, 95, 99, 103, 106, 107, 110, 111, 113, 114, 115, 116, 117, 118, 119, 120, 121, 122, 124, 126, 128, 130, 132, 134, 136, 138, 140, 146, 147, 148, 149, 168, 169, 170, 171, 206, 208, 209, 210, 212, 213, 214, 215, 221, 225, 226, 235, 278, 305, 318, 446, 447, 448, 489, 490, 491, 492, 493, 494, 513, 514, 516, 520, 521, 522, 536, 540, 556, 557, 558, 1004, 1015, 1141, 1142, 1143		F1G0J105A035	CAPACITOR, 6.3V, 1µF	130
C 22, 24, 26, 28, 31, 34, 78, 83, 88, 93, 97, 101, 105, 109, 190, 312, 339, 340, 523, 524, 550, 551, 552, 553, 554, 555, 700, 701, 1072		F1J0J2260002	CAPACITOR, 6.3V, 22µF	29
C 25, 27, 29, 32, 35, 44, 46, 49, 51, 54, 56, 59, 61, 64, 66, 85, 90, 94, 98, 102, 123, 125, 127, 129, 131, 133, 135, 137, 156, 159, 162, 163, 164, 165, 178, 181, 184, 185, 186, 187, 207, 211, 277, 348, 498, 499, 500, 501, 502, 503, 547, 571, 1024		F1H0J106A043	CAPACITOR, 6.3V, 10µF	53
C 72, 139		EEFSX0D331XE	CAPACITOR, 2V, 330µF	2

C 74, 141, 142, 143, 144, 145, 151, 153, 154, 155, 157, 158, 160, 161, 166, 167, 172, 173, 174, 175, 176, 179, 180, 182, 188, 192, 194, 195, 216, 217, 236, 237, 238, 239, 240, 241, 242, 243, 249, 250, 251, 262, 263, 266, 267, 268, 270, 271, 272, 273, 274, 275, 276, 285, 293, 297, 300, 301, 302, 304, 308, 310, 311, 313, 314, 317, 321, 322, 323, 324, 325, 331, 341, 342, 350, 351, 353, 354, 355, 356, 357, 371, 376, 402, 423, 425, 426, 427, 428, 431, 432, 434, 435, 436, 452, 460, 462, 505, 506, 508, 510, 517, 525, 529, 531, 532, 534, 535, 537, 539, 541, 542, 543, 546, 548, 561, 563, 564, 566, 570, 573, 576, 578, 580, 581, 582, 583, 584, 586, 594, 595, 596, 597, 598, 599, 602, 603, 604, 611, 612, 617, 618, 622, 623, 638, 656, 657, 658, 659, 662, 663, 664, 665, 667, 684, 685, 686, 687, 691, 694, 695, 697, 705, 706, 707, 1002, 1013, 1014, 1045, 1049, 1079, 1108, 1121, 1123, 1124, 1138, 1148, 1175, 1197, 1216		F1G1C104A048	CAPACITOR, 16V, 0.1µF	180
C 81, 92, 96, 374, 375, 579, 587, 588, 688, 689, 1047, 1050, 1114, 1154, 1161, 1165		F1H0J475A010	CAPACITOR, 6.3V, 4.7µF	16
C 100, 104, 108, 565, 1046, 1106, 1107, 1122, 1127, 1132, 1133, 1146, 1147, 1200, 1207		F1G1H1010005	CAPACITOR, 50V, 100pF	15
C 112, 1053, 1118, 1158		EEFSX0D331ER	CAPACITOR, 2V, 330µF	4
C 150, 152, 450, 451		EEFCX0J121R	CAPACITOR, 6.3V, 120µF	4
C 177, 269, 287, 288, 289, 290, 372, 619, 692, 693, 1031, 1076, 1109, 1110, 1128, 1129, 1149, 1150, 1179, 1219		F1H1A105A092	CAPACITOR, 10V, 1µF	20
C 183, 1073, 1075, 1135, 1137		F1J1A106A043	CAPACITOR, 10V, 10µF	5
C 189, 291, 292, 298, 303, 332, 334, 335, 562		F1J0J106A016	CAPACITOR, 6.3V, 10µF	9
C 191, 403, 495, 496, 497, 639		F1G1H470A542	CAPACITOR, 50V, 47pF	6
C 218, 219		F4Z0E227A018	CAPACITOR, 2V, 0.01µF	2

C 220, 244, 247, 254, 336, 509, 511, 512, 526, 575, 645, 646, 647, 648, 649, 650, 651, 652, 653, 654, 655, 660, 661, 696, 709, 1009, 1011, 1039, 1040, 1041, 1111, 1151		F1G1E103A059	CAPACITOR, 25V, 0.01µF	32
C 223		F1G1H6R0A544	CAPACITOR, 50V, 6.0pF	1
C 224, 282, 283, 620, 621		F1G1H5R0A543	CAPACITOR, 50V, 5pF	5
C 227, 228, 229, 230, 231, 232, 233, 234		F1G1H103A783	CAPACITOR, 50V, 0.01µF	8
C 245, 246		F1G1H1R0A543	CAPACITOR, 50V, 1pF	2
C 264, 1028		F1G1E223A062	CAPACITOR, 25V, 0.022µF	2
C 265, 1204		F1G1H152A496	CAPACITOR, 50V, 1500pF	2
C 279, 1172, 1183, 1193		F1J1E334A081	CAPACITOR, 25V, 0.33µF	4
C 281		F1G1H271A495	CAPACITOR, 50V, 270pF	1
C 294, 295, 394, 395, 610, 615, 702, 1160		F1G1H221A496	CAPACITOR, 50V, 220pF	8
C 315, 316, 343, 344, 433, 438, 507, 569, 585, 605, 1130		F1J1A106A022	CAPACITOR, 10V, 10µF	11
C 319		F1G1H8R0A544	CAPACITOR, 50V, 8pF	1
C 320		F1G1H7R0A544	CAPACITOR, 50V, 7.0pF	1
C 326, 327, 328, 330		F1H2A103A020	CAPACITOR, 100V, 0.01µF	4
C 329		F1L3D1020008	CAPACITOR, 2KV, 1000pF	1
C 345, 346, 349		F1H1A225A039	CAPACITOR, 10V, 2.2µF	3
C 361, 362, 363, 364, 411, 415, 418, 419, 420, 421, 422, 461, 590, 591, 592, 636, 1020, 1021, 1032, 1033, 1037, 1043, 1085, 1117, 1157, 1202, 1205, 1206, 1218		F1G1H102A459	CAPACITOR, 50V, 1000pF	29
C 377, 378, 379, 380,		F1J1E105A080	CAPACITOR, 25V, 1µF	5
C 386, 387, 388, 391, 392, 393		F1G1H3R0A543	CAPACITOR, 50V, 3pF	6
C 400, 401, 408, 410		F1G1H330A542	CAPACITOR, 50V, 33pF	4
C 437, 699, 1038, 1044, 1048, 1069, 1070		F1G1C473A004	CAPACITOR, 16V, 0.047µF	7
C 572		F1G1H180A542	CAPACITOR, 50V, 18pF	1
C 577, 1087, 1088		F1G1H150A542	CAPACITOR, 50V, 15pF	3
C 698, 1119		F4Z0E1570001	CAPACITOR	2
C 1000, 1003, 1005, 1131, 1159, 1162, 1164, 1176, 1180, 1190		F1H1H104A748	CAPACITOR, 50V, 0.1µF	10
C 1007, 1018, 1035, 1055, 1056, 1057, 1058, 1059, 1060, 1061, 1062, 1063, 1064, 1065, 1066, 1067, 1068, 1120, 1140, 1167, 1168, 1177, 1178, 1181, 1182, 1191, 1192		F1K1E1060001	CAPACITOR, 25V, 10µF	27
C 1016, 1017		EEFCX0J101R	CAPACITOR, 6.3V, 100µF	2
C 1022, 1026, 1029, 1051, 1115, 1126, 1134, 1155, 1166		F1H1C224A074	CAPACITOR, 16V, 0.22µF	9
C 1023		F1G1E183A062	CAPACITOR, 25V, 0.018µF	1
C 1036		EEFCX0G151R	CAPACITOR, 2V, 150µF	1

C 1084		F1G1H561A496	CAPACITOR, 50V, 560pF	1
C 1112, 1113, 1125, 1136, 1152, 1153		F1G1H182A496	CAPACITOR, 50V, 1800pF	6
C 1116		F1K1E106A131	CAPACITOR, 25V, 10µF	1
C 1145, 1186, 1187, 1188, 1189, 1194		EEFLX0D471R	CAPACITOR, 2V, 470µF	6
C 1163, 1211, 1212		F1G0J224A001	CAPACITOR, 6.3V, 0.22µF	3
C 1170, 1171		F1K1C226A121	CAPACITOR, 16V, 22µF	2
C 1195		EEFSX0D471XE	CAPACITOR, 2V, 470µF	1
C 1199, 1201, 1213		F1G1H122A496	CAPACITOR, 50V, 1200pF	3
C 1203, 1214		F1G1H331A496	CAPACITOR, 50V, 330pF	2
C 1208, 1215		F1G1H821A496	CAPACITOR, 50V, 820pF	2
C 1209, 1217		F1G1H222A496	CAPACITOR, 50V, 2200pF	2
C 1210		F1G1H220A542	CAPACITOR, 50V, 22pF	1
CF 1, 2, 1002		D4CC11030026	THERMISTOR	3
CF 1000, 1001		ERTJ0EV474F	THERMISTOR	2
CN 2		K1MYL4B00004	DDR3 SODIMM SOCKET STD	1
CN 3		K1MYL4B00005	DDR3 SODIMM SOCKET RVS	1
CN 5		K1KA02BA0085	CONNECTOR	1
CN 6, 7, 25		K1FY104BA024	CONNECTOR, USB	3
CN 8		K1FY119EA017	HDMI CONNECTOR	1
CN 9		K1KB30AA0049	CONNECTOR	1
CN 10		K1KY15AA0999	CONNECTOR	1
CN 12		K1NA12E00016	SD CARD SOCKET	1
CN 13		K1NAF0D00003	CONNECTOR	1
CN 14		K2LC1YYB0044	LAN CONNECTOR	1
CN 15		K1MY24BA0276	CONNECTOR	1
CN 16		K1MY52B00004	WLAN MODULE MINI PCI EXPRESS CONNECTOR	1
CN 17		K1FB115BA014	CONNECTOR	1
CN 19		K1MY50AA0040	CONNECTOR	1
CN 21, 22		K1MY08BA0276	CONNECTOR	2
CN 23		K1MY52BA0291	MINI PCI EXPRESS	1
CN 24		K1FY109A0015	USB3.0	1
CN 26		K1MY24AA0040	FPC CONNECTOR	1
CN 27		K1KA04AA0264	CONNECTOR	1
CN 28		K1MY36AA0040	CONNECTOR	1
CN 32		K1KY02AA0998	CONNECTOR	1
CN 34		K1KAA0AA0244	CONNECTOR	1
CN 1000		K1MY40BA0101	FPC CONNECTOR	1
D 1, 2, 8, 15		B0JCDD000001	DIODE, SHOTKEY BARIEEER	4
D 3		B0JDBE000002	DIODE	1
D 4, 5, 16, 17, 20, 21		B0KB00000044	DIODE	6
D 13		B0BD5R6A0005	DIODE	1
D 24, 1020, 1022		B0ACCK000003	DIODE	3
D 25, 26, 27, 28		B0ZBZ0000169	ESD PROTECTOR	4
D 1000, 1001, 1002		B0ADDH000004	DIODE	3
D 1003, 1006, 1038		B0JCSE000006	DIODE	3
D 1004		B0BC7R500001	ZENNER DIODE	1
D 1005		B0BC01700015	DIODE	1
D 1007, 1010, 1011, 1012, 1013, 1014, 1015, 1016, 1017, 1018		B0BC6R100010	ZENER DIODE	10
D 1008, 1009, 1030, 1031, 1035, 1037, 1042		B0JCMD000075	DIODE	7
D 1021		B2ABAM000002	DIODE	1
D 1023		B0ADCJ000026	DIODE	1
D 1029, 1034, 1036		B0JCCE000008	DIODE	3
D 1032		B0JDAE000004	DIODE	1

D 1033, 1039, 1040, 1041		B0JCRD000015	DIODE	4
F 2, 5, 7, 8, 11, 12, 16	⚠	K5H2022A0006	FUSE, 2A, 32V	7
F 3, 6, 9, 14	⚠	K5H4021A0010	FUSE, 4A, 24V	4
F 15, 1000, 1001, 1002	⚠	K5H123Y00001	FUSE, 12A, 65V	4
FL 1, 2, 3, 4, 5, 6		F1H0J1050022	CAPACITOR, 6.3V, 1µF	6
FL 7		F1L0E107A002	CAPACITOR, 2.5V, 100µF	1
IC 3		C1CB00003647	PCH	1
IC 4		C2GBD0000100	CPU	1
IC 17		C0JBAZ003072	LOGIC IC	1
IC 35, 86		C0DBZYY00026	IC, USB POWER SW	2
IC 37, 64, 69, 75, 100, 101, 102		C0JBAA000362	IC, LOGIC	7
IC 38		C0JBAE000321	IC, LOGIC	1
IC 41		C1CB00003588	CARD BUS CONTROLLER	1
IC 42		C1CB00002585	IC	1
IC 43		C0DBZYY00348	PC CARD POWER SWITCH	1
IC 44		C1CB00003599	LAN CONTROLLER	1
IC 45		C1CB00003065	LAN SWITCH	1
IC 46		C1CB00003460	AUDIO CODEC	1
IC 48		C1CB00003376	SUPER IO	1
IC 49		C0ZBZ0000978	IC	1
IC 50		C0JBAR000515	IC, Q-SWITCH	1
IC 53		C1CB00003245	IC	1
IC 54, 55, 76, 93, 94, 98, 105		C0JBAA000345	IC, LOGIC	7
IC 59		C0EBB0000202	IC	1
IC 60		C0EBY0000760	RESET IC	1
IC 61		C0EBY0000969	RESET IC	1
IC 66, 67		C0JBAA000381	IC, LOGIC	2
IC 70		C0JBAZ002836	IC, LOGIC	1
IC 73		C0JBAB000621	IC, LOGIC	1
IC 74		C2DBYY001053	MICRO CONTROLLER	1
IC 77		C1CB00003590	GPIO IC	1
IC 80		C3FBPY000225	FLASH ROM	1
IC 81		C1CB00003086	SECURITY CHIP	1
IC 83		C1CB00003622	USB3.0 CONTROLLER IC	1
IC 90		C0DBGYY00600	REGULATOR	1
IC 92		C3FBKY000090	FLASH ROM	1
IC 95		C1CB00003584	LEVEL SHIFTER	1
IC 99		C3EBDY000005	IC, EEPROM	1
IC 104		C0JBAA000511	IC	1
IC 1000, 1002		C0ABZA000047	IC, AMP	2
IC 1001		C0ABGA000072	OP AMP	1
IC 1003		C0EBY0000974	VOLTAGE DITECTOR	1
IC 1004		C0DBAYY01062	POWER IC	1
IC 1007, 1011		C0DBAYY00423	IC	2
IC 1008		C0DBAYY00752	2CH SWITCHING POWER	1
IC 1009		C0DBEYY00116	REGULATOR	1
IC 1012		C0DBDYY00020	IC	1
IC 1014		C0DBAYY01071	IMVP7.0 POWER IC	1
IC 1015		C0DBAYY01063	POWER IC	1
IC 1016		C0DBEYY00160	POWER IC	1
JK 1000		K2EEYB000001	JACK	1
L 1, 9, 10, 54		G1C100MA0392	COIL	4
L 51, 1029		J0JHC0000078	DC POWER LINE BEADS	2
L 56		J0JCC0000315	BEADS	1

L 57, 58, 65, 72, 73, 74, 75, 90, 91, 92, 93, 101, 103, 108, 110, 114, 118, 119		J0MAB0000236	CHIP COMMON MODE CHALK COIL	18
L 59, 60, 61, 66, 98, 104, 105		J0JHC0000115	CHIP FERRITE BEADS	7
L 62, 63, 64		J0MAB0000229	CHIP COMMON MODE CHALK COIL	3
L 77, 78, 79, 85, 86, 87, 88, 89, 94, 95		J0JCC0000408	CHIP BEADS	10
L 80, 81, 130		J0JDC0000105	CHIP BEADS	3
L 82, 83, 84		J0JGC0000057	CHIP BEADS	3
L 96, 1000, 1001		J0JKC0000007	INDUCTOR	3
L 106		J0JYC0000401	BEADS FILTER	1
L 109, 111, 112, 113		J0ZZB0000132	FILTER	4
L 115, 116, 127, 128		EXC24CH500U	USB3.0用EMI FILTER	4
L 1002, 1005		G1C4R7ZA0237	COIL	2
L 1015, 1021		G1C1R5MA0503	INDUCTOR	2
L 1016		G1C6R8ZA0291	INDUCTOR	1
L 1019		G1CR82M00006	COIL	1
L 1022		G1C4R7MA0448	INDUCTOR	1
L 1024, 1026		ETQP4LR36AFM	POWER CHOKE COIL	2
L 1028		ETQP4LR36AFC	POWER CHOKE COIL	1
L 1031		G1C1R0MA0503	COIL	1
PA 1, 6	⚠	D4FB1R10A024	POLYSWITCH	2
PA 2, 3	⚠	ERBSE0R50U	FUSE, 0.5A, 32V	2
Q 1, 2, 7, 8, 9, 10, 11, 12, 14, 48, 61, 62, 88, 99, 100, 102, 104, 105, 111, 1082, 1085, 1087		B1CFGD000023	TRANSISTOR	22
Q 3, 4, 60, 93, 96, 107, 1000, 1001, 1003, 1006, 1007, 1010, 1013, 1025, 1029, 1070, 1071, 1081		B1GBCFJN0037	TRANSISTOR	18
Q 5, 94, 106, 109, 110, 1014, 1027, 1030, 1052, 1072, 1073		B1GDCFNN0031	TRANSISTOR	11
Q 6, 51, 59, 80		B1MBDCA00004	TRANSISTOR	4
Q 13, 57, 70, 89, 90, 101, 103, 113, 1004, 1005, 1008, 1015, 1023, 1038, 1040, 1043, 1044, 1045, 1047, 1048, 1050, 1051, 1053, 1101, 1102, 1103, 1104, 1105, 1106		B1GBCFNN0042	TRANSISTOR	29
Q 56, 71, 1028		B1CHRC000008	FET	3
Q 72, 73, 74, 75, 76, 77, 78, 79, 84, 112		B1GDCFJA0025	TRANSISTOR	10
Q 91, 92, 98, 114, 1046, 1124, 1125		B1CHRC000024	SILICON P CHANNEL MOSFET	7
Q 97, 108		B1GBCFJA0032	TRANSISTOR	2
Q 1002		B1CFND000011	FET	1
Q 1009, 1011, 1012, 1086		B1CHRD000033	FET	4
Q 1016		B1MBADA00007	FET	1

Q 1017, 1018, 1019, 1020, 1068, 1069, 1074, 1075, 1077, 1078, 1079, 1083, 1084, 1088, 1108, 1110, 1112, 1114, 1116, 1118, 1120, 1122, 1123		B1CFRD000060	N-CH POWER MOS-FET	23
Q 1033, 1034, 1036, 1089, 1109		B1CFRD000080	SILICON N CHANNEL MOSFET	5
Q 1037, 1041, 1042, 1049		B1CHGD000014	TRANSISTOR	4
Q 1080		B1GBCFEN0013	TRANSISTOR	1
Q 1107		B1GFCFNN0022	BIAS RESISTOR TRANSISTOR	1
Q 1111, 1113, 1115, 1117, 1119, 1121		B1CFRD000050	FET	6
R 1, 23, 66, 79, 80, 116, 117, 125, 132, 169, 279, 313, 435, 512, 527, 708, 730, 731, 747, 748, 781, 1120, 1124, 1132		D0GA102JA023	RESISTOR, 1/16W, 1KΩ	24
R 6, 7, 8, 14, 15, 20, 21, 22, 27, 30, 31, 33, 34, 37, 39, 40, 41, 42, 44, 49, 67, 75, 119, 123, 160, 163, 165, 166, 168, 182, 183, 188, 189, 200, 201, 209, 217, 218, 224, 229, 239, 240, 241, 244, 270, 272, 273, 274, 275, 304, 311, 315, 329, 335, 336, 381, 382, 383, 425, 427, 430, 432, 436, 467, 488, 489, 493, 502, 503, 513, 516, 522, 524, 528, 534, 537, 554, 562, 565, 566, 568, 587, 589, 591, 592, 596, 598, 602, 604, 610, 611, 628, 639, 640, 651, 654, 655, 656, 668, 669, 671, 676, 679, 680, 700, 701, 702, 724, 725, 735, 736, 737, 738, 739, 740, 755, 766, 774, 775, 780, 788, 791, 793, 794, 796, 1055, 1058, 1060, 1065, 1074, 1076, 1081, 1082, 1104, 1151, 1152, 1160, 1176, 1209, 1262, 1267, 1271, 1275, 1278		D0GAR00J0005	RESISTOR, 1/16W, 0Ω	144
R 9, 756, 1264		D1BDR011A111	RESISTOR, 1/3W, 0.011Ω	3
R 10, 11, 140, 167, 340, 347, 348, 373, 377, 415, 417, 464, 547, 1004, 1005, 1100, 1101, 1102, 1105, 1106, 1107, 1108, 1109, 1110, 1239, 1240, 1257, 1258		D0GA101JA023	RESISTOR, 1/16W, 100Ω	28
R 12, 1155		D0GA131JA023	RESISTOR, 1/16W, 130Ω	2
R 13, 29		D0GA430JA023	RESISTOR, 1/16W, 43Ω	2
R 16, 48, 351, 352		D0GA750JA023	RESISTOR, 1/16W, 75Ω	4
R 26		D1BA62R0A023	RESISTOR, 1/16W, 62Ω	1
R 32, 1218, 1219, 1283, 1284		D1BA56R0A023	RESISTOR, 1/16W, 56Ω	5

R 38, 76, 83, 99, 170, 171, 181, 186, 187, 194, 195, 204, 243, 251, 252, 263, 285, 293, 294, 295, 305, 319, 322, 324, 325, 354, 371, 378, 379, 380, 384, 385, 386, 411, 450, 452, 454, 465, 466, 474, 480, 482, 490, 492, 494, 495, 498, 510, 511, 515, 529, 531, 535, 538, 539, 542, 544, 546, 629, 631, 635, 666, 667, 686, 687, 703, 707, 709, 728, 751, 753, 785, 1031, 1116, 1121, 1125, 1255		D0GA103JA023	RESISTOR, 1/16W, 10KΩ	77
R 50, 53, 299, 302, 342		D0GDR00J0004	RESISTOR, 1/8W, 0Ω	5
R 56		D1BA1400A023	RESISTOR, 1/16W, 140Ω	1
R 57		D1BA25R5A023	RESISTOR, 1/16W, 25.5Ω	1
R 58		D1BA2000A023	RESISTOR, 1/16W, 200Ω	1
R 64		D1BA4991A023	RESISTOR, 1/16W, 4.99KΩ	1
R 73, 74		D1BA24R9A023	RESISTOR, 1/16W, 24.9Ω	2
R 103, 114, 118, 124, 137, 142, 196, 199, 211, 227, 258, 261, 262, 320, 337, 349, 353, 376, 404, 424, 433, 445, 455, 486, 497, 514, 518, 533, 548, 574, 689, 704, 705, 726, 727, 764, 765, 773, 777, 778, 792, 799, 800, 801, 1000, 1032, 1035, 1036, 1039, 1089, 1139, 1184, 1225, 1231, 1232, 1241, 1268, 1269, 1289, 1327		D0GA104JA023	RESISTOR, 1/16W, 100KΩ	60
R 120, 130, 144, 145, 146, 468, 484, 485		D1HA1038A010	RESISTOR, 1/16W, 10KΩ	8
R 121		D1BA3900A023	RESISTOR, 1/16W, 390Ω	1
R 126, 127, 128, 638		D0GA220JA023	RESISTOR, 1/16W, 22Ω	4
R 129		D1BA22R6A023	RESISTOR, 1/16W, 22.6Ω	1
R 133, 207, 208, 249, 250, 403, 405, 745, 746, 795		D0GA222JA023	RESISTOR, 1/16W, 2.2KΩ	10
R 136		D0GA121JA023	RESISTOR, 1/16W, 120Ω	1
R 138, 161, 242		D0GA334JA023	RESISTOR, 1/16W, 330KΩ	3
R 148, 1210, 1233, 1235		D0GA393JA023	RESISTOR, 1/16W, 39KΩ	4
R 156		D0GA106JA023	RESISTOR, 1/16W, 10MΩ	1
R 157, 158		D0GA203JA023	RESISTOR, 1/16W, 20KΩ	2
R 159, 206, 798, 1030, 1090, 1091, 1092, 1093, 1094, 1133, 1185, 1330		D0GA105JA023	RESISTOR, 1/16W, 1MΩ	12
R 172, 350, 406, 407, 408, 409, 414, 540, 741, 742, 752, 783		D0GA330JA023	RESISTOR, 1/16W, 33Ω	12
R 177		D1BA37R4A023	RESISTOR, 1/16W, 37.4Ω	1
R 178, 220		D1BA49R9A023	RESISTOR, 1/16W, 49.9Ω	2
R 179, 219		D1BA7500A023	RESISTOR, 1/16W, 750Ω	2
R 184, 185, 370		D1H81034A042	NETWORK CHIP RESISTOR	3
R 198		D1BA90R9A023	RESISTOR, 1/16W, 90.9Ω	1
R 205		D1H82224A042	NETWORK CHIP RESISTOR	1

R 230		D1H83304A042	NETWORK CHIP RESISTOR	1
R 245, 246, 247, 400, 401, 402, 1158		D1BA1500A023	RESISTOR, 1/16W, 150Ω	7
R 248, 1171, 1173		D1BA1001A022	RESISTOR, 1/16W, 1KΩ	3
R 253, 1147		D1BA2371A023	RESISTOR, 1/16W, 2.37KΩ	2
R 266, 267, 297, 561, 571, 583, 584, 585, 586		D1H8R0040016	NETWORK CHIP RESISTOR	9
R 271, 280		D1BA5101A023	RESISTOR, 1/16W, 5.1KΩ	2
R 277		D1H85604A042	NETWORK CHIP RESISTOR	1
R 283, 338, 434, 1028, 1053, 1168		D0GA473JA023	RESISTOR, 1/16W, 47KΩ	6
R 307, 309, 770		D0GA472JA023	RESISTOR, 1/16W, 4.7KΩ	3
R 314		D0GA332JA023	RESISTOR, 1/16W, 3.3KΩ	1
R 317		D1BA3011A023	RESISTOR, 1/16W, 3.01KΩ	1
R 318		D1H87504A042	NETWORK CHIP RESISTOR	1
R 321, 491, 549, 1054		D0GA474JA023	RESISTOR, 1/16W, 470KΩ	4
R 330, 710, 784, 1261		D0GA221JA023	RESISTOR, 1/16W, 220Ω	4
R 345, 363, 364, 365, 366, 375, 459, 460, 606, 652, 653, 657, 723, 1067, 1071, 1117, 1118, 1119, 1128, 1178, 1221, 1242, 1252, 1286		D0GBR00J0004	RESISTOR, 1/10W, 0Ω	24
R 346		F1G1H470A542	CAPACITOR, 50V, 47pF	1
R 355		D1H84734A042	NETWORK CHIP RESISTOR	1
R 358, 360, 1142		D1BA2002A023	RESISTOR, 1/16W, 20KΩ	3
R 359		D1BA3922A023	RESISTOR, 1/16W, 39.2KΩ	1
R 440		D1H81044A042	NETWORK CHIP RESISTOR	1
R 453, 1088		D0GA684JA023	RESISTOR, 1/16W, 680Ω	2
R 461, 632		D0GA471JA023	RESISTOR, 1/16W, 470Ω	2
R 462, 463		D1H82214A042	NETWORK CHIP RESISTOR	2
R 469, 470, 477, 754,		D1BA3901A023	RESISTOR, 1/16W, 3.9KΩ	5
R 501		D1BA43R0A023	RESISOTR, 1/16W, 43Ω	1
R 523, 1019, 1022, 1046		D1BA1002A022	RESISTOR, 1/16W, 10KΩ	4
R 636		D1BA1601A023	RESISTOR, 1/16W, 1.6KΩ	1
R 641		D1BA5602A023	RESISOTR, 1/16W, 56KΩ	1
R 692, 693, 768, 769, 1144, 1149		D0GA202JA023	RESISTOR, 1/16W, 2KΩ	6
R 722		D0GB1R0JA065	RESISTOR, 1/10W, 1Ω	1
R 1001		D1BA1802A023	RESISTOR, 1/16W, 18KΩ	1
R 1002, 1003, 1006, 1007, 1008, 1009, 1011, 1012, 1013, 1014, 1015, 1016, 1017, 1018, 1020, 1021		ERJT06J152V	RESISTOR, 1/4W, 1.5KΩ	16
R 1010		D1JB4M00A016	RESISTOR, 1W, 4mΩ	1
R 1023		D0GB562JA065	RESISTOR, 1/10W, 5.6KΩ	1
R 1024		D1BDR470A103	RESISTOR, 1/4W, 0.47Ω	1
R 1025		D0GB3R3JA065	RESISTOR, 1/10W, 3.3Ω	1
R 1026, 1027, 1029		D0GA562JA023	RESISTOR, 1/16W, 5.6KΩ	3
R 1033, 1038		D1BA1003A053	RESISTOR, 1/16W, 100KΩ	2
R 1034, 1037		ERA3YKB154V	RESISTOR, 1/16W, 150KΩ	2
R 1043, 1207		D1BA3302A022	RESISTOR, 1/16W, 33KΩ	2
R 1044		D1BA4701A022	RESISTOR, 1/16W, 4.7KΩ	1
R 1045		D1JB5M00A029	RESISTOR, 1W, 5mΩ	1
R 1047		D1BA1502A022	RESISTOR, 1/16W, 15KΩ	1
R 1048, 1049, 1083, 1084, 1098, 1287, 1288		D1BDR022A111	RESISTOR, 1/3W, 0.022Ω	7
R 1050, 1227		D1BDR016A111	RESISTOR, 1/3W, 0.016Ω	2

R 1051		D1BA1102A023	RESISTOR, 1/16W, 11KΩ	1
R 1052, 1169, 1175		D1BA1302A023	RESISTOR, 1/16W, 13KΩ	3
R 1062, 1298		D1BA1203A022	RESISTOR, 1/16W, 120KΩ	2
R 1063, 1237, 1250		D1BA3002A022	RESISTOR, 1/16W, 30KΩ	3
R 1064		D1BA3003A023	RESISTOR, 1/16W, 300KΩ	1
R 1068		D0GA912JA023	RESISTOR, 1/16W, 9.1KΩ	1
R 1072		D0GA822JA023	RESISTOR, 1/16W, 8.2KΩ	1
R 1079		D1BA6202A022	RESISTOR, 1/16W, 62KΩ	1
R 1080		D1BA2702A022	RESISTOR, 1/16W, 27KΩ	1
R 1085, 1208		D1BA2402A022	RESISTOR, 1/16W, 24KΩ	2
R 1099		D1BA2401A023	RESISTOR, 1/16W, 2.4KΩ	1
R 1111, 1113		D0GD122JA052	RESISTOR, 1/8W, 1.2KΩ	2
R 1112		D0GA223JA023	RESISTOR, 1/16W, 22KΩ	1
R 1114, 1115		D0GD222JA052	RESISTOR, 1/8W, 2.2KΩ	2
R 1122, 1126, 1131		D1JB1M00A036	RESISTOR, 1W, 1mΩ	3
R 1123, 1127		D0GA1R0JA023	RESISTOR, 1/16W, 1.0Ω	2
R 1129		D1BA1201A023	RESISTOR, 1/16W, 1.2KΩ	1
R 1130, 1138		D1BA2742A023	RESISTOR, 1/16W, 27.3KΩ	2
R 1134, 1140		D1BA3831A023	RESISTOR, 1/16W, 3.83KΩ	2
R 1135, 1136, 1172, 1182, 1216		D0GA100JA023	RESISTOR, 1/16W, 10Ω	5
R 1141		D1BA1503A023	RESISTOR, 1/16W, 150KΩ	1
R 1145, 1159		D1BA8061A023	RESISTOR, 1/16W, 8.06KΩ	2
R 1146, 1211, 1276		D1BA1003A023	RESISTOR, 1/16W, 100KΩ	3
R 1148		D1BA1200A023	RESISTOR, 1/16W, 120Ω	1
R 1153, 1251		D1BA2001A023	RESISTOR, 1/16W, 2KΩ	2
R 1156		D1BA54R9A023	RESISTOR, 1/16W, 54.9Ω	1
R 1157		D1BA2741A023	RESISTOR, 1/16W, 2.74KΩ	1
R 1164		D1BA1471A023	RESISTOR, 1/16W, 1.47KΩ	1
R 1165		D0GB101JA065	RESISTOR, 1/10W, 100Ω	1
R 1166		D1BA1000A023	RESISTOR, 1/16W, 100Ω	1
R 1167		D1BA1691A023	RESISTOR, 1/16W, 1.69KΩ	1
R 1170, 1177		D1BA1101A022	RESISTOR, 1/16W, 1.1KΩ	2
R 1179, 1180, 1181, 1222, 1223, 1224		D1BDR033A111	RESISTOR, 1/3W, 0.033Ω	6
R 1212		D1BA6802A023	RESISTOR, 1/16W, 68KΩ	1
R 1213		D1BA1002A023	RESISTOR, 1/16W, 10KΩ	1
R 1214, 1245, 1279, 1281		D0GB100JA065	RESISTOR, 1/10W, 10Ω	4
R 1215, 1248, 1280		D0GB102JA065	RESISTOR, 1/10W, 1KΩ	3
R 1220, 1272, 1285		D1BA8202A022	RESISTOR, 1/16W, 82KΩ	3
R 1229, 1244, 1259		D1BA1003A022	RESISTOR, 1/16W, 100KΩ	3
R 1230, 1260		D1BA3302A023	RESISTOR, 1/16W, 33KΩ	2
R 1234, 1254		D1BA5103A022	RESISTOR, 1/16W, 510KΩ	2
R 1236, 1238		D1BA2002A022	RESISTOR, 1/16W, 20KΩ	2
R 1249		D1BA2202A023	RESISTOR, 1/16W, 22KΩ	1
R 1265, 1266		D1BDR018A111	RESISTOR, 1/3W, 0.011Ω	2
R 1270		D1BA1803A022	RESISTOR, 1/16W, 180KΩ	1
R 1273		D1BA3301A022	RESISTOR, 1/16W, 3.3KΩ	1
R 1274		D1BA1602A022	RESISTOR, 1/16W, 16KΩ	1
R 1277		D1BA4702A023	RESISTOR, 1/16W, 47KΩ	1
R 1292		D1BA1432A022	RESISTOR, 1/16W, 14.3KΩ	1
R 1293		D1BB1623A075	RESISTOR, 1/10W, 162KΩ	1
R 1294		D1BA1802A053	RESISTOR, 1/16W, 18KΩ	1
R 1295		D1BA6800A022	RESISTOR, 1/16W, 680Ω	1
R 1296		D1BA6041A022	RESISTOR, 1/16W, 6.04KΩ	1
R 1297		D1BA3652A022	RESISTOR, 1/16W, 36.5KΩ	1
R 1299, 1300, 1301, 1302		D1BDR082A111	RESISTOR, 1/3W, 0.082Ω	4

R 1304		D0GA512JA023	RESISTOR, 1/16W, 5.1KΩ	1
R 1305, 1306		D1BA3001A022	RESISTOR, 1/16W, 3KΩ	2
R 1307, 1308, 1309		D1BDR047A111	RESISTOR, 1/3W, 0.047Ω	3
SW 2		K0D112B00071	SW	1
T 1, 2		G5BYC0000015	TRANCE	2
X 2, 6		H0J327200085	CRYSTAL OSCILLATOR	2
X 3, 5		H0J2505A0053	CRYSTAL OSCILLATOR	2
X 4		H0J245500096	CRYSTAL OSCILLATOR	1
X 7		H0J240500051	CRYSTAL OSCILLATOR	1
ZA 1, 2		K1YGZZ000078	MINI PCI EXPRESS STUD BOS	2
ZA 3, 4		K1YGZZ000075	STUD	2
ZA 5, 6		DRHM0160ZA	SCREW	2
POWER PCB				
C 2200		F1G1C104A048	CAPACITOR, 16V, 0.1µF	1
C 2201		F1G1H1010005	CAPACITOR, 50V, 100pF	1
CN 2200		K1MY18BA0101	CONNECTOR	1
CN 2201		K1NA09EA0029	SIM CARD SOCKET	1
CN 2202		K1KY02BA0356	CONNECTOR	1
JK 2200, 2201, 2202, 2203, 2204, 2205, 2206, 2207		K1QZA1AE0001	CONNECTOR	8
R 2201, 2206		D0GAR00J0005	RESISTOR, 1/16W, 0Ω	2
R 2204, 2205		D0GA101JA023	RESISTOR, 1/16W, 100Ω	2
SW 2200		EVQPLDA15	SWITCH	1
KEYBOARD PCB				
CN 2300		K1MY36BA0276	FPC CONNECTOR	1
CN 2301		K1MY16BA0097	CONNECTOR	1
CN 2302		K1MY13BA0102	CONNECTOR	1
CN 2303		K1MY07BA0096	CONNECTOR	1
DVD PCB				
CN 2400		K1MY15BA0276	CONNECTOR	1
CN 2401		K1KY13AA0812	CONNECTOR	1
SERIAL PCB				
C 2500, 2501, 2502, 2503, 2504, 2505, 2506, 2507		F1G1H1010005	CAPACITOR, 50V, 100pF	8
CN 2500		K1MY10AA0040	CONNECTOR	1
CN 2501		K1FA209BA004	CONNECTOR	1
PAD PCB				
C 2600		F1H1A105A092	CAPACITOR, 10V, 1µF	1
CN 2600		K1MY10BA0101	CONNECTOR	1
CN 2601		K1MY12BA0276	CONNECTOR	1
SW 2600, 2601		K0F111B00076	RUBBER SW	2
WWAN DUMMY PCB				
JK 2700, 2701, 2702, 2703		K1QZA1AE0001	CONNECTOR	4